Run IIB L1CAL Upgrade Trigger Cabling

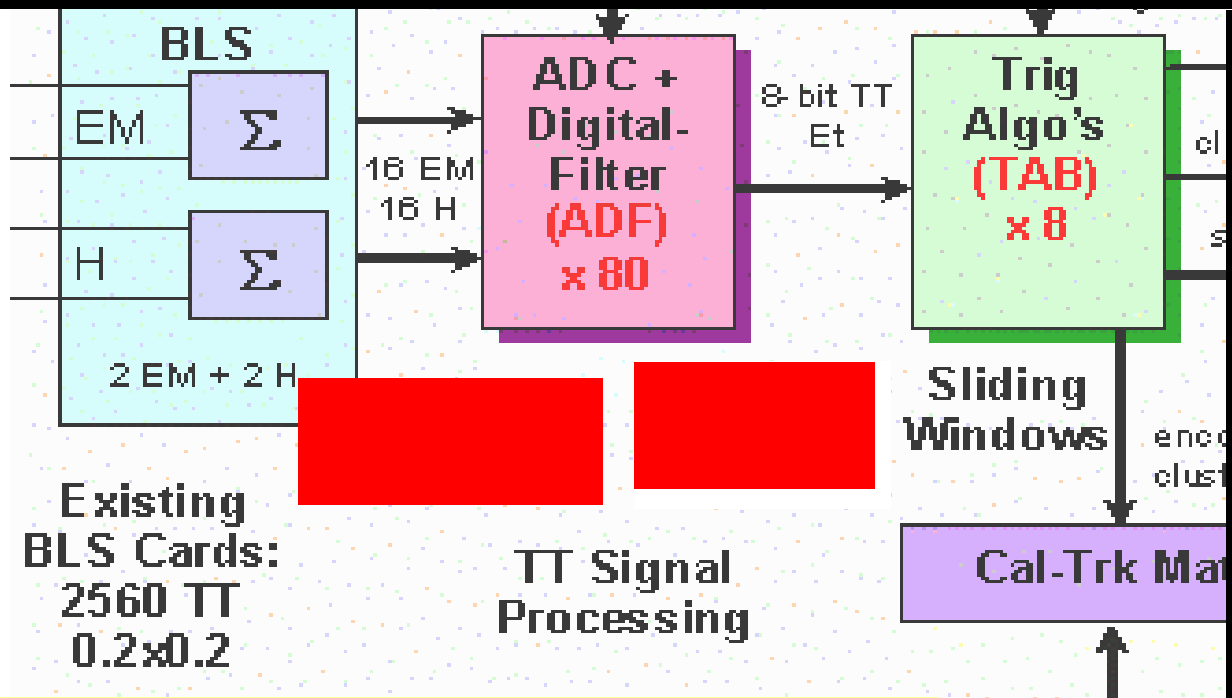

- We have 1280 fragile Run I cables
- We need 1280 new Run II cables with transition panel

Diagram of Existing L1 CAL Run I Trigger Rack Layout

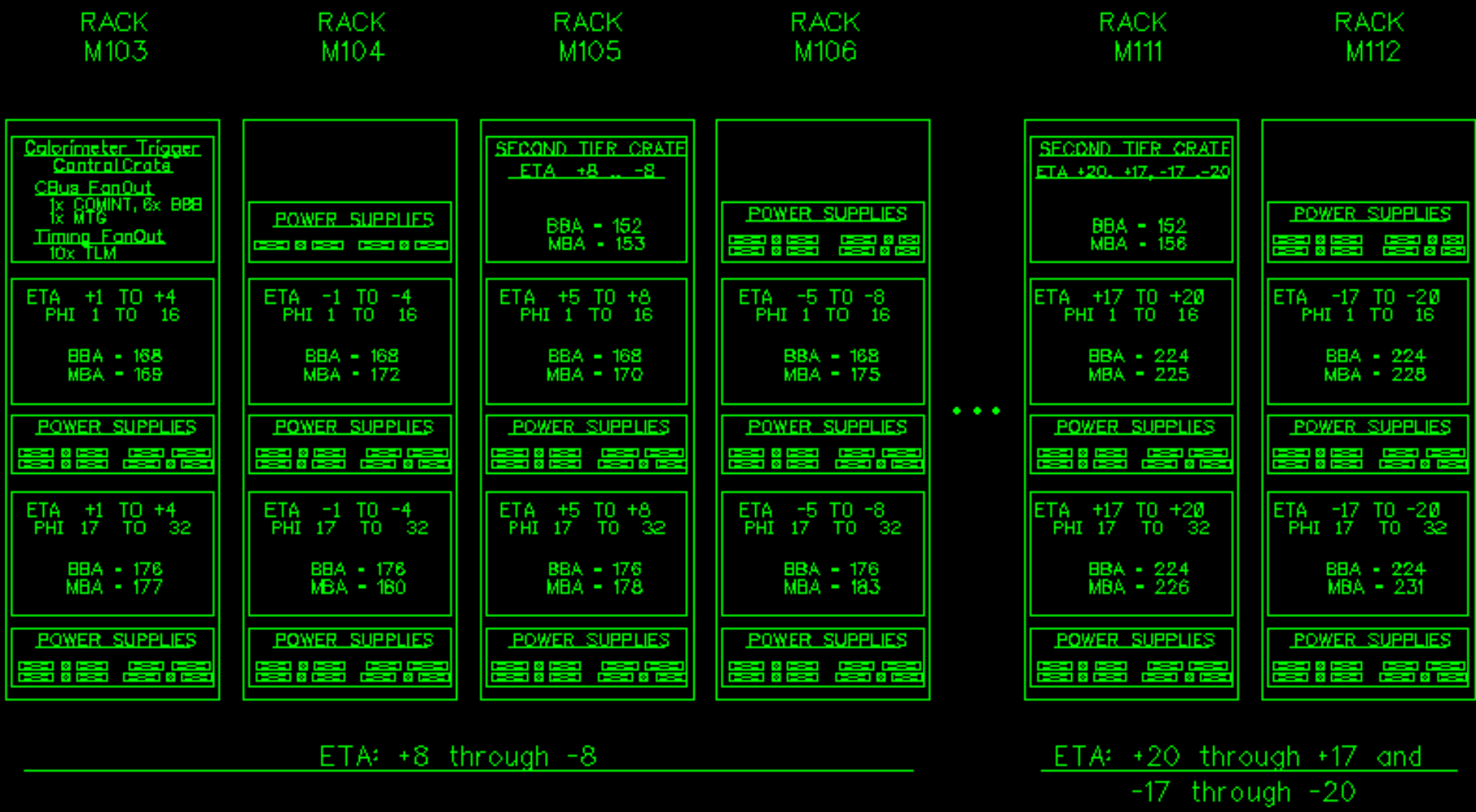

Run I L1 CAL Trigger Current Rack Layout

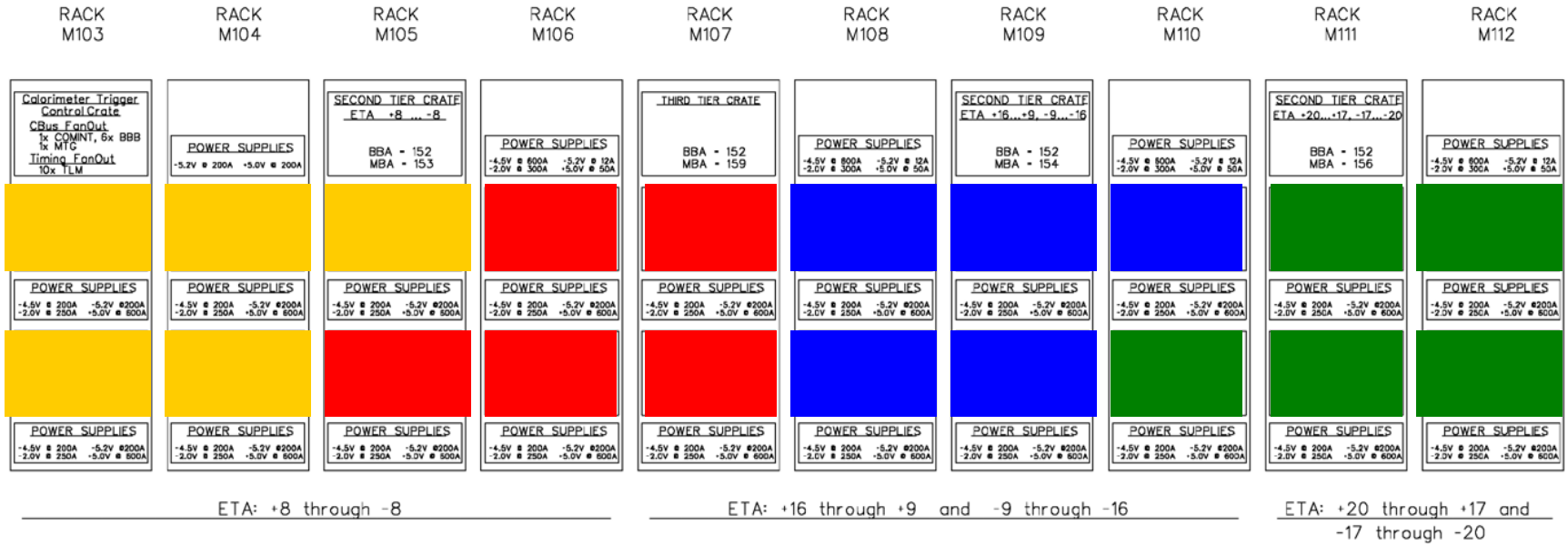

Draft of Run IIB L1 CAL Upgrade Trigger Rack Layout

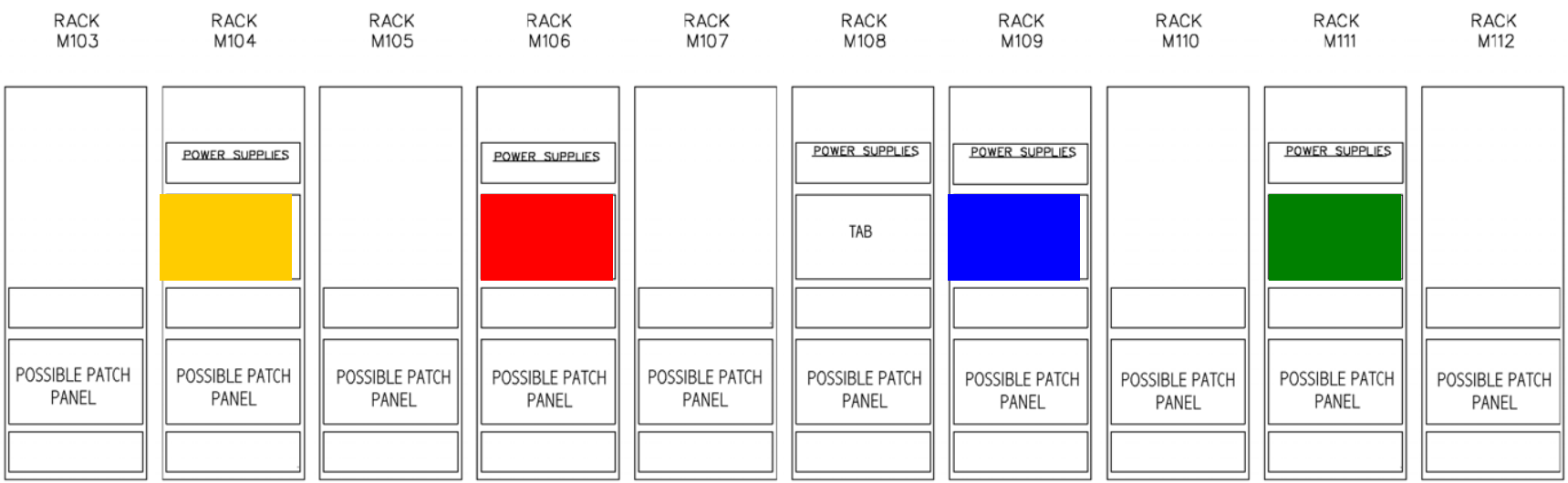

ADF Prototype Board

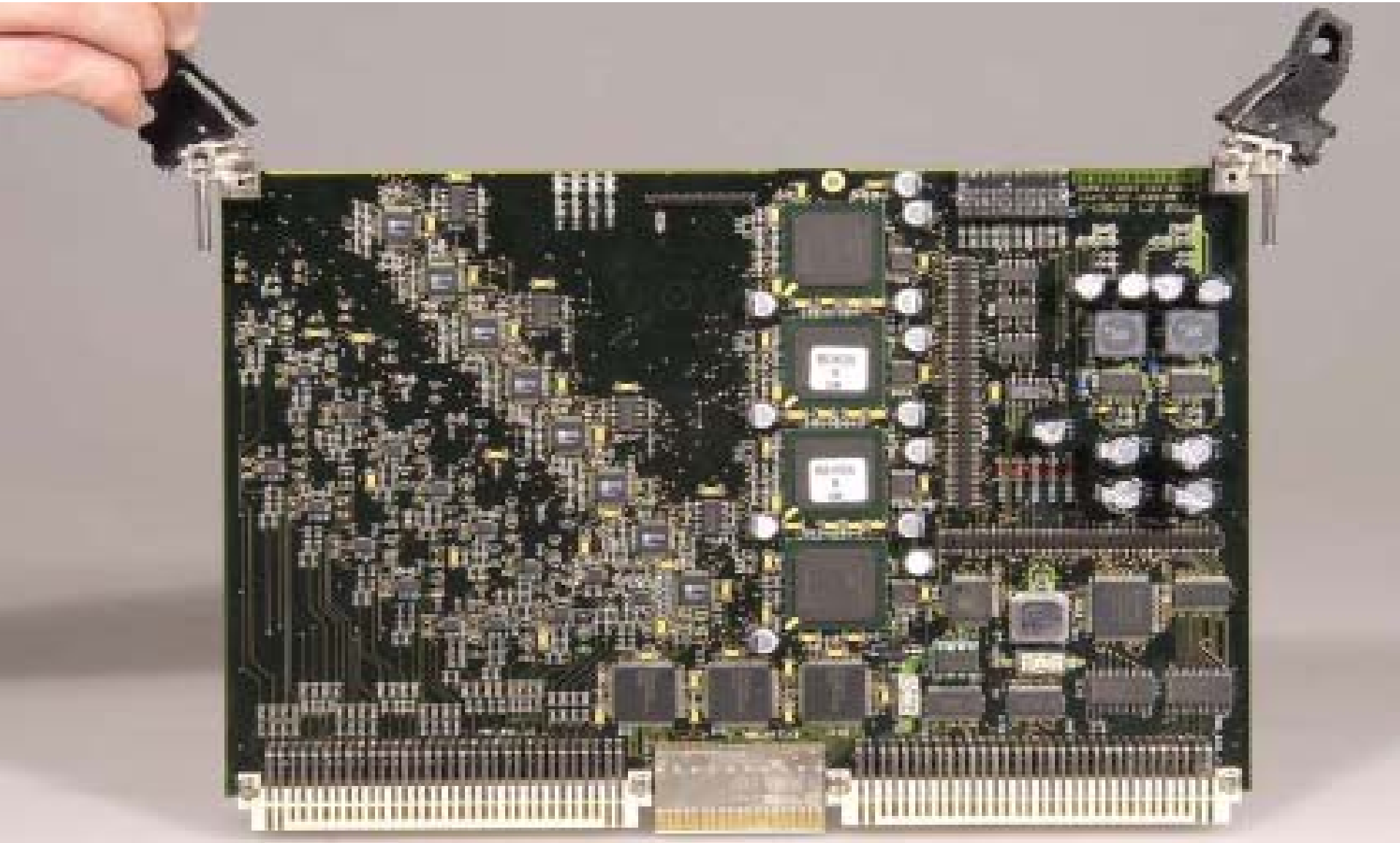

TAB Board Prototype

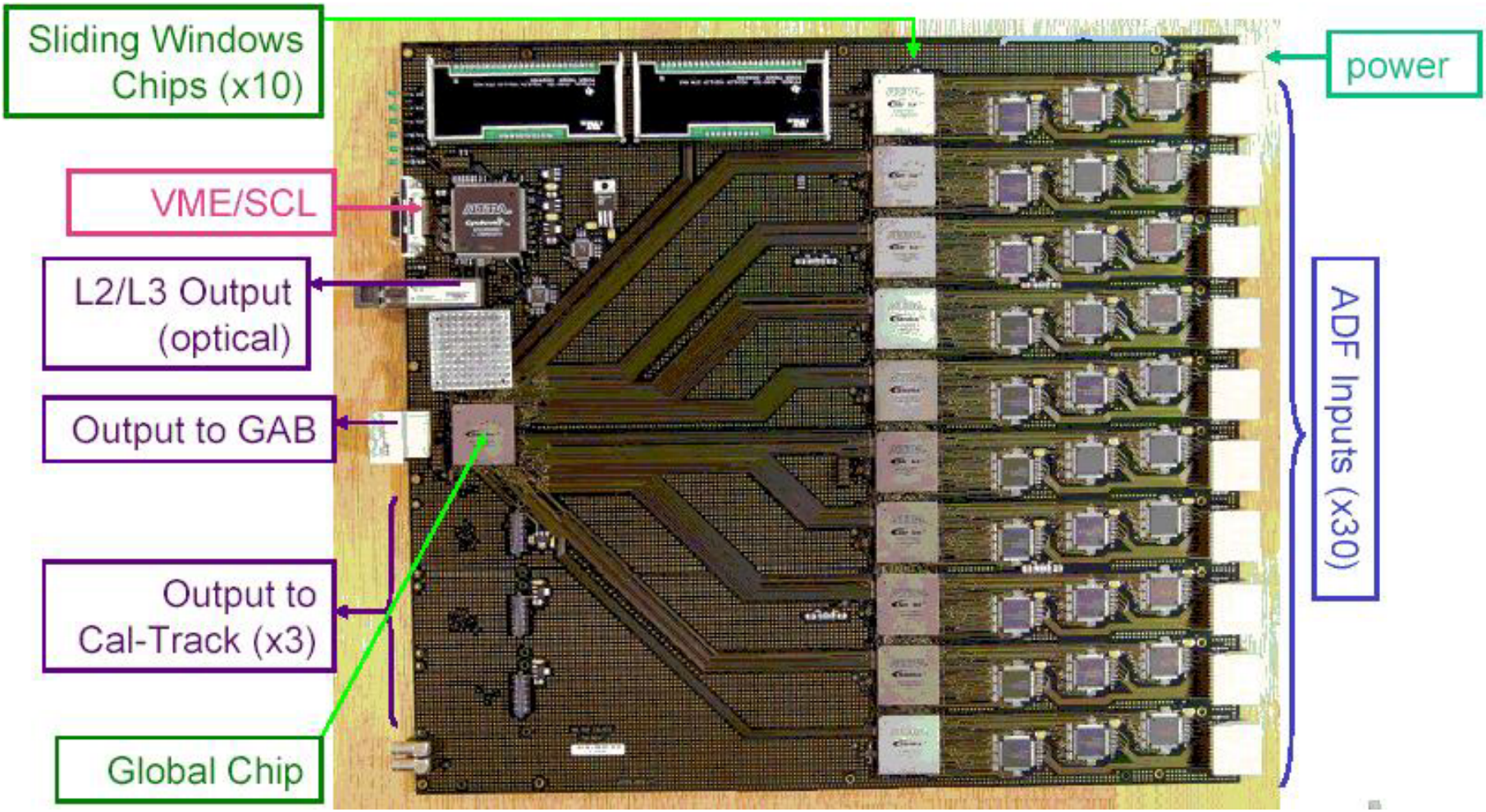

ADF Boards – Trigger Eta & Phi

ADF Board – Trigger Eta & Phi Distribution

Trigger Eta vs Phi	Current Rack	1 4	5 8	9 12	13 16	17 20	21 24	25 28	29 32
-17 –20	M112								
-13 –16	M110								
-9 –12	M108								
-5 –8	M106								
-1 –4	M104								
1 4	M103								
5 8	M105								
9 12	M107								
13 16	M109								
17 20	M111								

ADF Output Distribution to TAB

TAB Board #	1			2			3			4		
Trigger Phi	29-32	1-4	5-8	1-4	5-8	9-12	5-8	9-12	13-16	9-12	13-16	17-20
SW Chip vs Trigger Eta	A	B	C	A	B	C	A	B	C	A	B	C
1_____-20 –17												
2_____-16 -13												
3_____-12 -9												
4_____-8 -5												
5_____-4 -1												
6_____1 4												
7_____5 8												
8_____9 12												
9_____13 16												
10_____17 20												

ADF Output Distribution to TAB

TAB Board #	5			6			7			8		
Trigger Phi	13 16	17 20	21 24	17 20	21 24	25 28	21 24	25 28	28 32	25 28	28 32	1 4
SW Chip # vs Trigger Eta	A	B	C	A	B	C	A	B	C	A	B	C
1_____-20 -17												
2_____-16 -13												
3_____-12 -9												
4_____-8 -5												
5_____-4 -1												
6_____1 4												
7_____5 8												
8_____9 12												
9_____13 16												
10_____17 20												

TAB Inputs from ADF Boards

ADF BOARD	TAB inputs A		TAB inputs B		TAB inputs C	
1	SW	16	SW	6	SW	76
2	SW	26	SW	16	SW	6
3	SW	36	SW	26	SW	16
4	SW	46	SW	36	SW	26
5	SW	56	SW	46	SW	36
6	SW	66	SW	56	SW	46
7	SW	76	SW	66	SW	56
8	SW	6	SW	76	SW	66
9	SW	15	SW	5	SW	75
10	SW	25	SW	15	SW	5
11	SW	35	SW	25	SW	15
12	SW	45	SW	35	SW	25
13	SW	55	SW	45	SW	35
14	SW	65	SW	55	SW	45
15	SW	75	SW	65	SW	55
16	SW	5	SW	75	SW	65
17	SW	17	SW	7	SW	77
18	SW	27	SW	17	SW	7
19	SW	37	SW	27	SW	17
20	SW	47	SW	37	SW	27
21	SW	57	SW	47	SW	37
22	SW	67	SW	57	SW	47
59	SW	32	SW	22	SW	12
60	SW	42	SW	32	SW	22
61	SW	52	SW	42	SW	32
62	SW	62	SW	52	SW	42
63	SW	72	SW	62	SW	52
64	SW	2	SW	72	SW	62
65	SW	20	SW	10	SW	80
66	SW	30	SW	20	SW	10
67	SW	40	SW	30	SW	20
68	SW	50	SW	40	SW	30
69	SW	60	SW	50	SW	40
70	SW	70	SW	60	SW	50
71	SW	80	SW	70	SW	60
72	SW	10	SW	80	SW	70
73	SW	11	SW	1	SW	71
74	SW	21	SW	11	SW	1
75	SW	31	SW	21	SW	11
76	SW	41	SW	31	SW	21
77	SW	51	SW	41	SW	31
78	SW	61	SW	51	SW	41
79	SW	71	SW	61	SW	51
80	SW	1	SW	71	SW	61

Summary

- Recommend
  1. One ADF crate/rack
  2. Transition panels for old-to-new trigger cables
     - Can be rack based between ADF racks
  3. Cable trays from each ADF rack to the TAB rack as each TAB will receive cable inputs from each ADF crate
- Coming soon
  - Spreadsheet
    - Missing transition panel & GAB
  - D0 Note